SPORTSFIELD SPECIALTIES
WWW.SPORTSFIELD.COM

Excellence from Design to Installation
41155 State Highway 10, PO Box 231, Delhi, NY 13753 CALL: 888-975-3343 FAX: 607-746-8481

Standard Part Numbers:
PVBCAW- Powder Coated White
PVBCAO- Powder Coated Orange
PVBCAY- Powder Coated Yellow

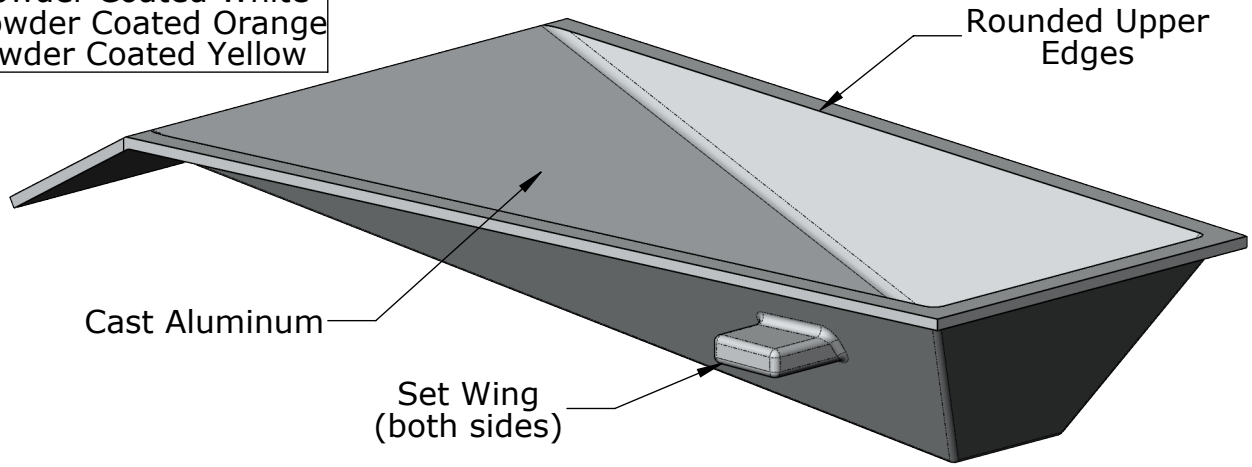

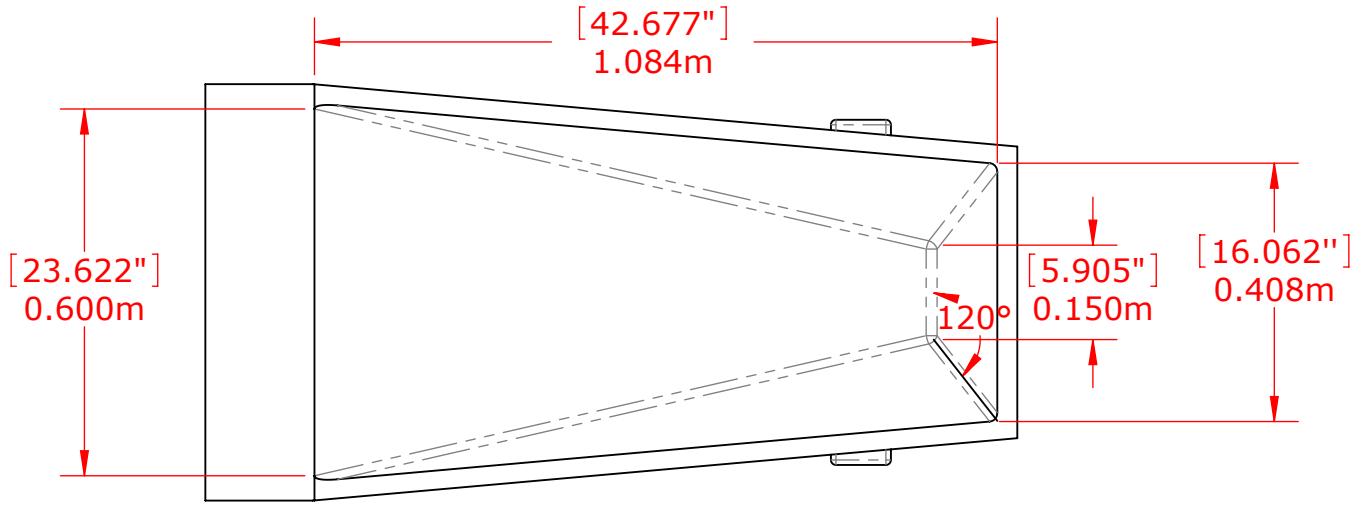

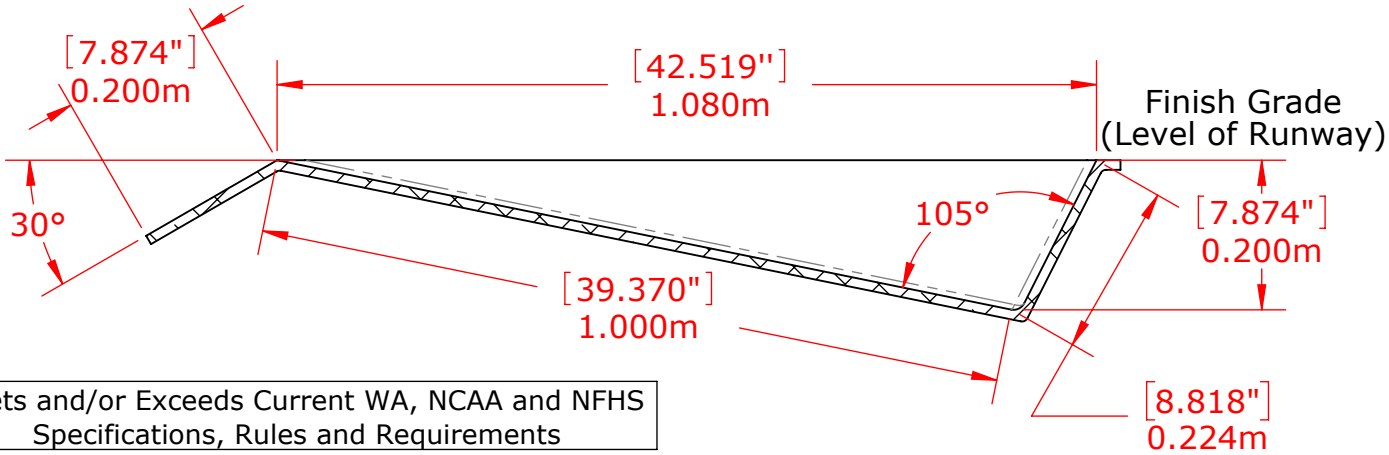

Meets and/or Exceeds Current WA, NCAA and NFHS Specifications, Rules and Requirements

PROPRIETARY AND CONFIDENTIAL

THE INFORMATION CONTAINED IN THIS DRAWING IS THE SOLE PROPERTY OF SPORTSFIELD SPECIALTIES INC. ANY REPRODUCTION IN PART OR AS A WHOLE WITHOUT THE WRITTEN PERMISSION OF SPORTSFIELD SPECIALTIES INC. IS PROHIBITED.

PVBCA Cast Aluminum Pole Vault Box

Not To Scale

Sportsfield Specialties Inc 07292026