SPORTSFIELD SPECIALTIES
WWW.SPORTSFIELDSPECIALTIES.COM
Excellence from Design to Installation
41155 State Highway 10, PO Box 231, Delhi, NY 13753 CALL: 888-975-3343 FAX: 607-746-8481

*No mobility Wheel Kit Option Available

Powder Coated White Finish

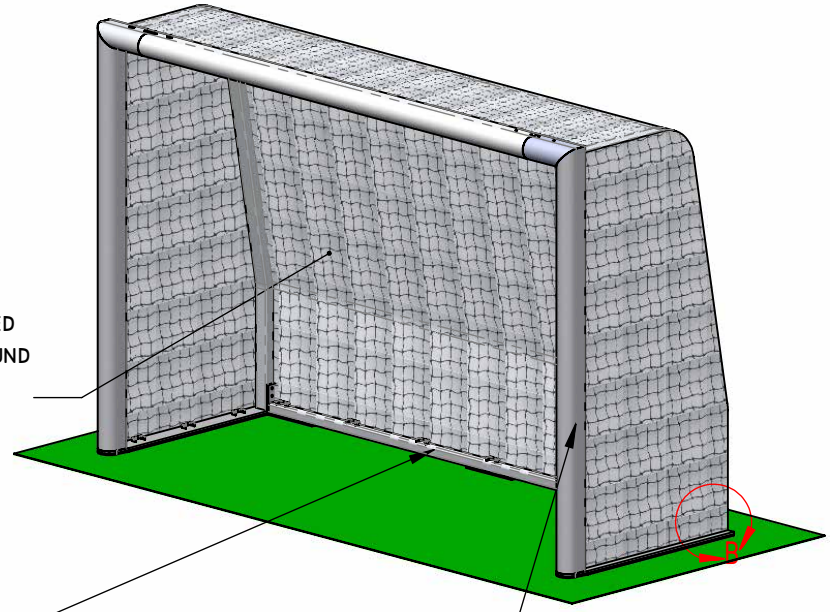

Soccer Net, 3mm Twisted, Knotted Polyethylene Net with a Rope Bound Perimeter for Easy Hanging and a 4" Square Mesh, Standard Color White (Orange Optional)

2" x 2" Square Aluminum Tube (Rear Ground Bar)

4" Round Faced Aluminum Extrusion, Crossbar & Uprights

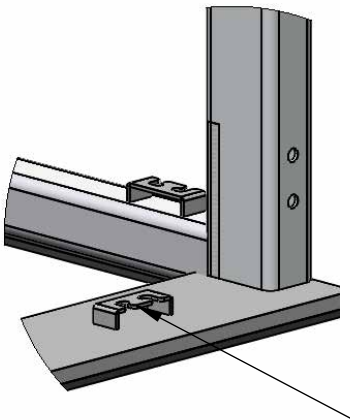

Soccer net Mounting Clip (Lifetime Warranty)

Detail B

3" x 2" Rectangular Aluminum Tube, End Frames

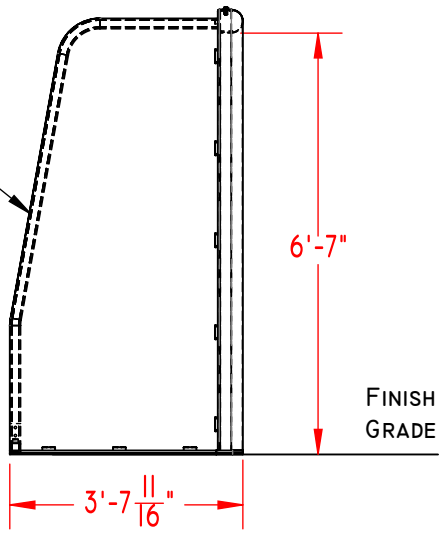

Front of Post to Rear of Ground Bar

PROPRIETARY AND CONFIDENTIAL
THE INFORMATION CONTAINED IN THIS DRAWING IS THE SOLE PROPERTY OF SPORTSFIELD SPECIALTIES INC. ANY REPRODUCTION IN PART OR AS A WHOLE WITHOUT THE WRITTEN PERMISSION OF SPORTSFIELD SPECIALTIES INC. IS PROHIBITED.

FG610R 6'7" x 9'10" Futsal Soccer Goal

Not To Scale

Sportsfield Specialties Inc 08222016